AUTO Strong

產 品 系 列 型 錄

軟/硬夾爪

A STRONGHOLD BY PRECISION AND POWER

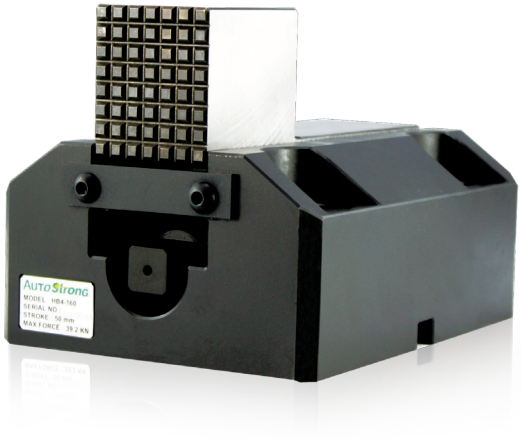

產品示意圖

HB4

強力置爪

Boring mill jaw

1. 適用於巨型車床、立式車床、模治具與工作物的挾持。
2. 四個一組附T型螺栓。

單位：mm

型式規格	爪行程 (mm)	最大夾持力 (kN)	重量 (kg)
HB4-160	50	39.2	29

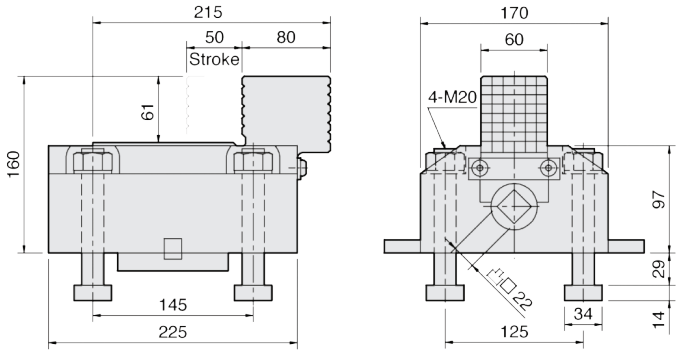

單位：mm

型式規格	爪行程 (mm)	最大夾持力 (kN)	重量 (kg)
HB4-189	50	39.2	31

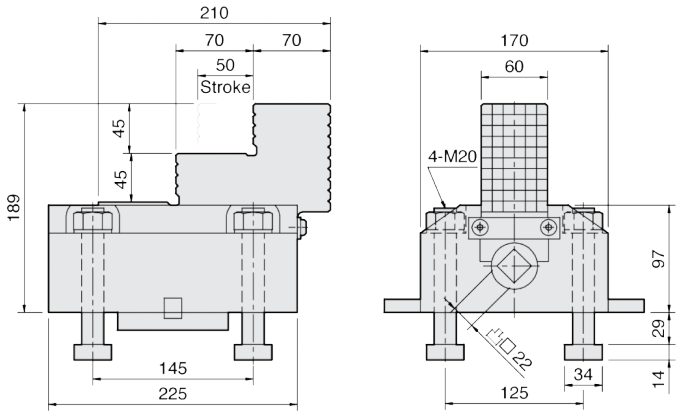

單位：mm

型式規格	爪行程 (mm)	最大夾持力 (kN)	重量 (kg)	適合生爪
HB4-2P	50	39.2	31	HE2486

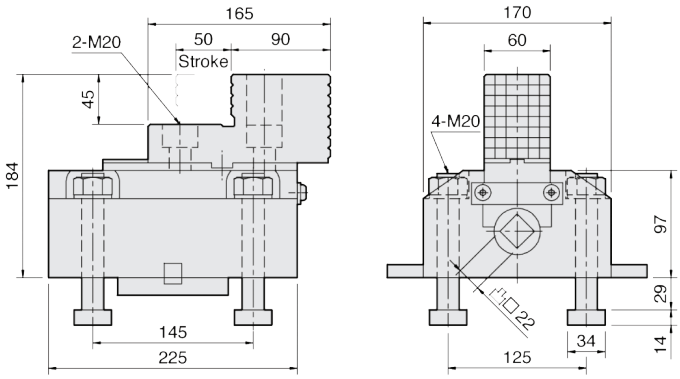

HJ

油壓夾頭硬爪

Hard jaw for hydraulic power chuck

1. 油壓夾頭用硬爪。
2. CNC車床用硬爪。

產品示意圖

Fig-1

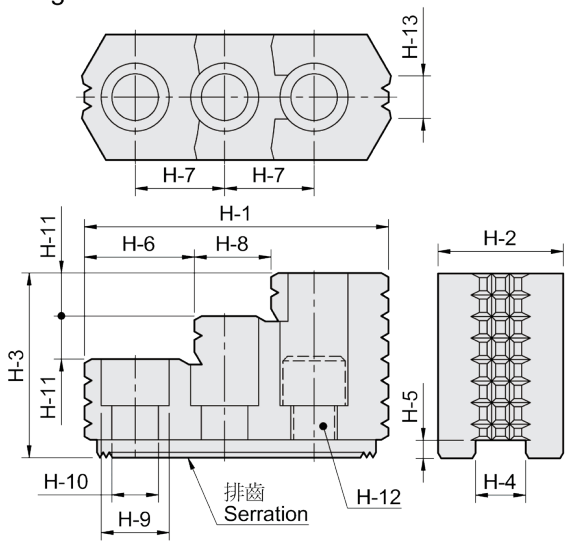

Fig-2

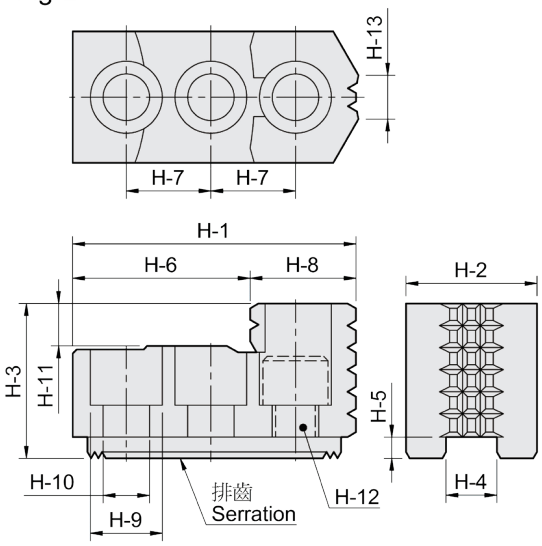

單位：mm

型式規格	H-1	H-2	H-3	H-4	H-5	H-6	H-7	H-8	H-9	H-10	H-11	H-12	H-13	排齒節距	參考圖	適合夾頭	三爪重量 (kg)
HJ05	53	23	27.5	10	4	30.5	14	22.5	13.5	8.5	10	M8	6	1.5x60°	Fig-2	N-204, N-205, V-205	0.4
HJ06	67	31	35	12	5	39.5	20	27.5	17	11	12	M10	11	1.5x60°	Fig-2	N-206, NL-06, V-206	1.0
HJ08	86	35	51	14	5	31	25	18	19	13	12	M12	12	1.5x60°	Fig-1	N-208, NL-08, V-208	1.9
HJ10	99.5	40	54	16	5	43	30	17	19	13	13	M12	15	1.5x60°	Fig-1	N-210, NL-10, V-210	2.9
HJ12	103	50	52	21	4	62.5	30	40.5	25	17	17	M16	30	1.5x60°	Fig-2	N-212	3.5
HJ12-1	103	50	52	18	5	62.5	30	40.5	22	15	17	M14	30	1.5x60°	Fig-2	V-212	3.6
HJ15	149	62	86	22	8	63	43	34	32	21	20	M20	40	1.5x60°	Fig-1	N-215, N-218	9.6
HJ15-1	149	62	86	25.5	5	63	43	34	32	21	20	M20	40	1.5x60°	Fig-1	V-215, V-218	9.5
HJ24-1	159.5	80	90	25	9	104.5	50	55	32	21	40	M20	55	3.0x60°	Fig-2	N-220, N-224, N-232 V-221, V-224, V-232	14.3
PB600	140	60	75	25.5	6	50.35	38	49.86	31	21	19	M20	21.1	3/32"x90°	Fig-1	PB-ES600	7.2
PB850	220	75	85	30	6.5	130	62	90	38	26	30	M25	35	3/32"x90°	Fig-2	PB-ES850	20.2

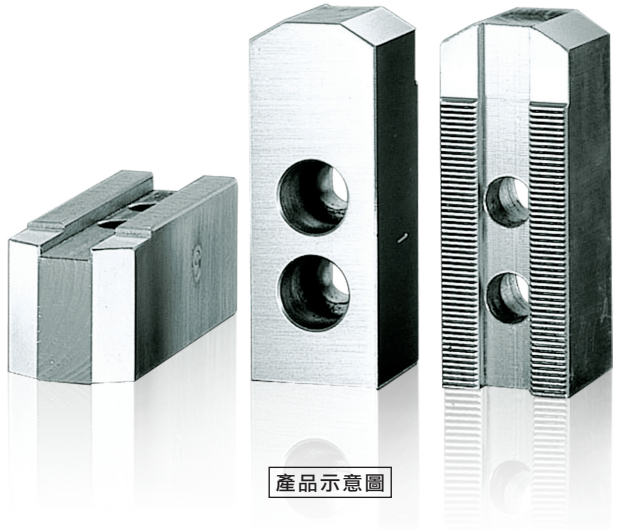

HC

油壓夾頭生爪

Soft jaw for hydraulic power chuck

1. 油壓夾頭用生爪。
2. CNC車床用生爪。

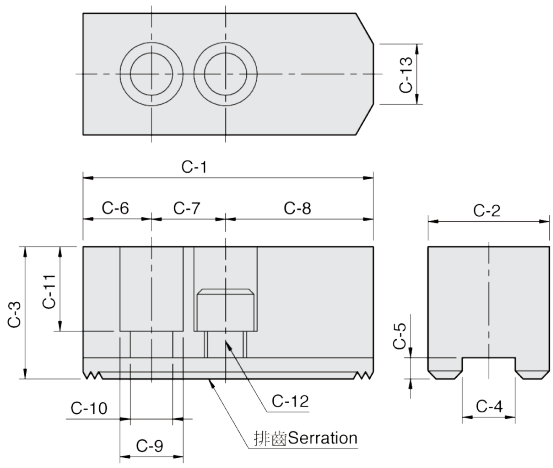

排齒Serration

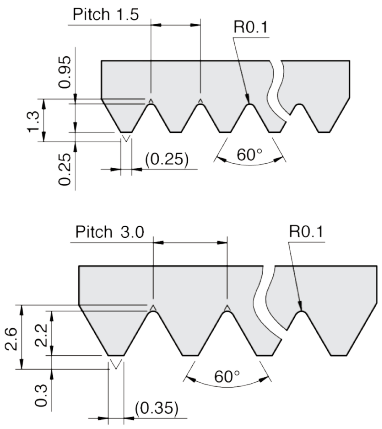

單位：mm

型式 尺寸	C-1	C-2	C-3	C-4	C-5	C-6	C-7	C-8	C-9	C-10	C-11	C-12	C-13	排齒 節距	適合夾頭	三爪重量 (kg)
HC04	52	23	23	10	5	10	14	28	14	9	13	M8	3	1.5x60°	N-204	0.45
HC05	62	25	30	10	5	10	14	38	14	9	20	M8	3	1.5x60°	N-205, V-205	0.7
HC06	73	31	36	12	5	15	20	38	17	11	24	M10	14	1.5x60°	N-206, NB-306, NL-06, V-206	1.5
HC08	95	35	37	14	5	24	25	46	19	13	22	M12	16	1.5x60°	N-208, NB-208, NL-08, V-208	2.4
HC10	110	40	42	16	5	30	30	50	19	13	27	M12	18	1.5x60°	N-210, NB-210,NB-310, NL-10, V-210	3.7
HC12	130	50	50	21	5	40	30	60	25	17	30	M16	23	1.5x60°	N-212, NB-212	6.5
HC15	165	62	62	22	8	37	43	85	32	21	37	M20	—	1.5x60°	N-215, N-218, NB-215, NB-218	12.5
HC08-1	95	35	37	12	5	24	20	51	17	11	22	M10	16	1.5x60°	NHT-208	2.4
HC12-1	130	50	50	18	5	40	30	60	23	15	30	M14	23	1.5x60°	V-212, V-212R	6.6
HC15-1	165	62	62	25.5	6	37	43	85	32	21	37	M20	—	1.5x60°	V-215, V-218, V-215R, V-218R	12.5
HC24-1	180	64	70	25	9	40	60	80	32	21	45	M20	—	3.0x60°	N-220, N-224, V-221, V-224 V-221R, V-224R	15.8
HC32-1	210	74	90	25	9	40	80	90	32	21	65	M20	—	3.0x60°	V-232R	29.2
HC15-2	156	64	70	26	9	34	50	72	32	21	45	M20	—	3.0x60°	V-215(P3.0).V-218(P3.0)	13.4

Soft jaw for draw down power chuck

單位：mm

型式尺寸	C-1	C-2	C-3	C-4	C-5	C-6	C-7	C-8	C-9	C-10	C-11	C-12	C-13	適合夾頭	三爪重量 (kg)	參考圖
DR-06	70	35	34	10	6	43	—	10	23	15.5	21	M14	2.5	DR-06	1.5	Fig-1
DR-08	84	40	44.5	16	7	53	26	12	20	13.5	29	M12	3.5	DR-08	2.7	Fig-2
DR-10	100	50	49.5	18	7	62	32	15	23	15.5	32	M14	3.5	DR-10	4.6	Fig-2
DR-12	120	60	54.5	20	7	78	36	17	26	17.5	36	M16	3.5	DR-12	7.5	Fig-2

Fig-1

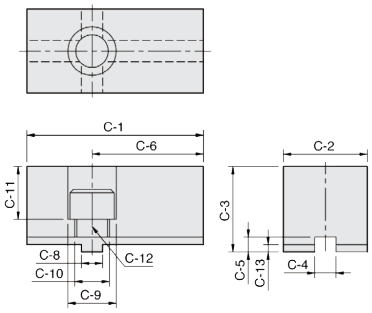

Fig-2

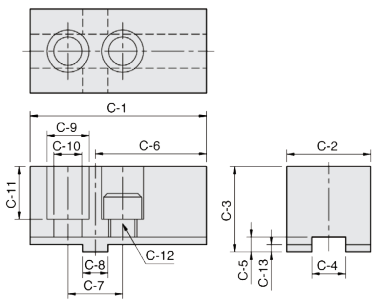

搖擺式夾頭專用油壓生爪

Soft jaw for ball swing lock chuck

單位：mm

型式尺寸	C-1	C-2	C-3	C-4	C-5	C-6	C-7	C-9	C-10	C-11	C-12	適合夾頭	三爪重量 (kg)
BL-12	108	70	70	57.1	3.3	19	44.45	25	17	59	M16	BL-12	10.6

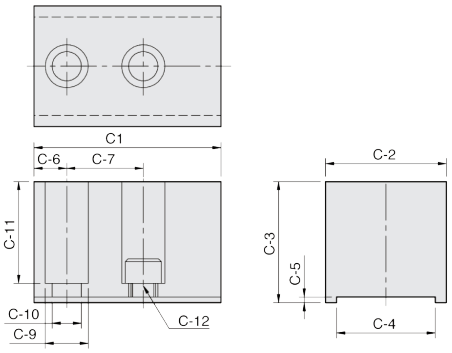

氣壓式動力夾頭專用生爪

Soft jaws for pneumatic power chuck

單位：mm

型式尺寸	C-1	C-2	C-3	C-4	C-5	C-6	C-7	C-8	C-9	C-10	C-11	C-12	C-13	適合夾頭	三爪重量 (kg)
PB600	205	60	60	25.5	6	25	38	104	32	21	44	M20	55	PB-ES600	13.5
PB850	320	80	80	30	7	35	60	165	38	26	53	M24	110.5	PB-ES850	40.2

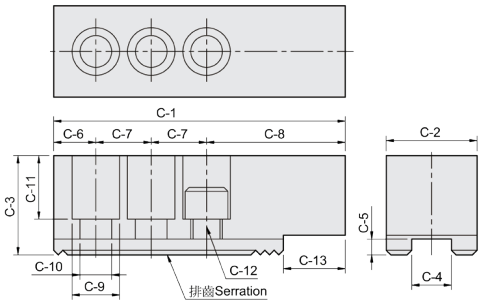

排齒Serration

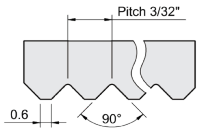

HC40-1

大型中實油壓夾頭生爪

Soft jaw for hydraulic power chuck

重量 Weight
17 kg / PC

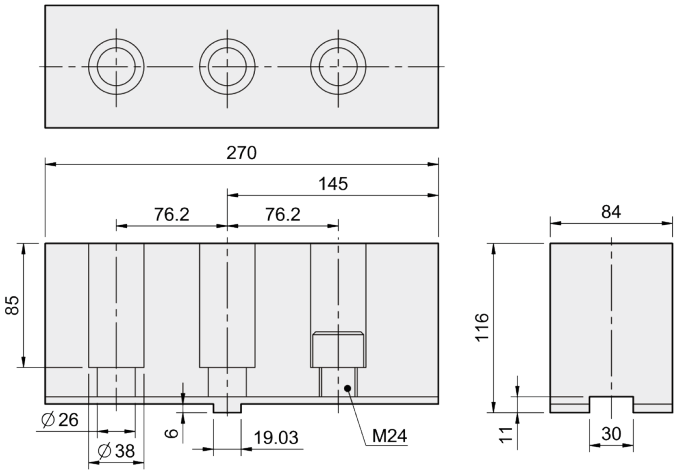

HJ40-1

大型中實油壓夾頭硬爪

Hard jaw for hydraulic power chuck

重量 Weight
11 kg / PC

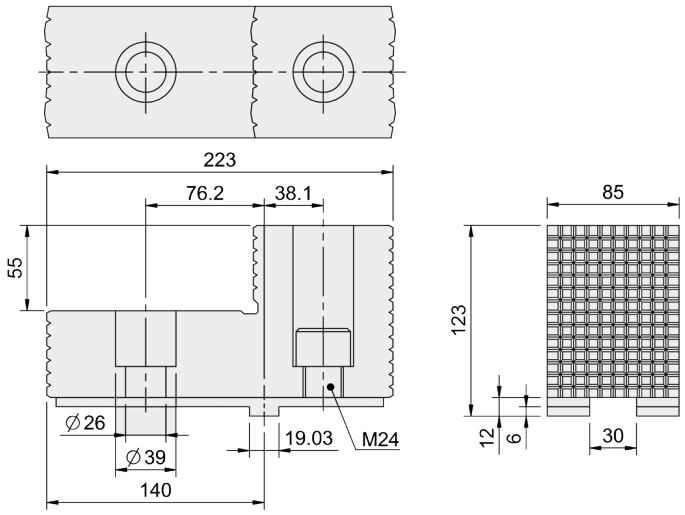

SKC

強力型生爪

Soft jaw for strong scroll chuck

1. 三爪夾盤強力型生爪。
2. 特殊規格設計製造。

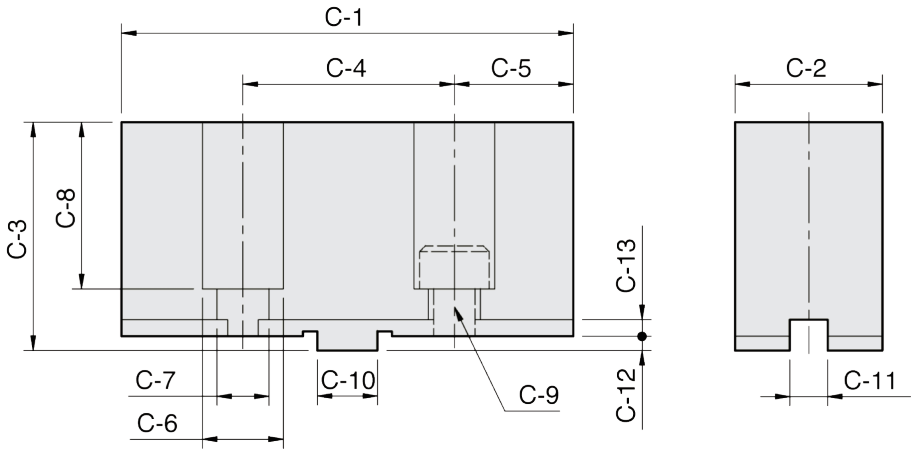

單位：mm

型式規格	C-1	C-2	C-3	C-4	C-5	C-6	C-7	C-8	C-9	C-10	C-11	C-12	C-13	適合夾頭	三爪重量 (kg)
SKC04	52	19	30	24	14	11	7	21	M6	9.53	7.94	2.5	3.5	SK-4	0.45
SKC06	73	26	37	38.1	17.45	14	9	25	M8	12.68	7.94	3	3.5	SK-6, KD-6"	1.5
SKC07	95	31	48	44.45	25.275	17	11	34	M10	12.68	7.94	3	3.5	SK-7, SK-8, KD-8", KA-8"	2.7
SKC09	110	37	48	54	28	19	13	34	M12	19.03	12.7	3	3.5	SK-9, SK-10, KD-10", KA-10"	3.7
SKC12	125	40	54	63.5	30.75	19	13	38	M12	19.03	12.7	3	3.5	SK-12, KD-12", KA-12"	4.9
SKC16	160	50	70	76.2	41.9	25	17	48	M16	19.03	12.7	6	6	SK-16	11
HE2486	155	59	86	76.2	52.9	32	21	66	M20	19.03	12.7	6	4	HB4-2P	19.2(4PC)

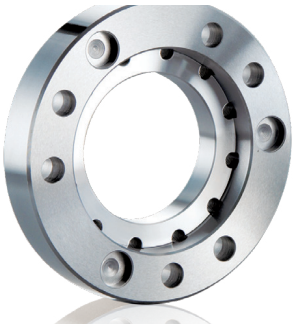

產品示意圖

ADAPTER

連接板

Mounting adapter on short taper spindle noses DIN55026

· 連接板適用短錐度主軸鼻端符合DIN55026。

TYPE1

單位：mm

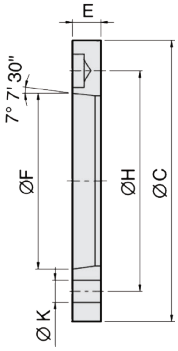

型式尺寸	主軸鼻端	C	F	H	K	E	適合夾頭
N-205A4	A4	110	63.513	82.55	3-11	15	N-205
NT-205A4	A4	110	63.513	82.55	4-11	15	NT-205
N-206A5	A5	140	82.563	104.78	6-11	15	N-206, NB-306, NL-06, V-206, DR-06
NT-206A5	A5	140	82.563	104.78	6-11	15	NT-206, VT-206
NIT-206A5	A5	140	82.563	104.78	4-11	15	NIT-206
N-208A6	A6	170	106.375	133.35	6-13	17	N-208, NB-208, NL-08, V-208, DR-08
NT-208A6	A6	170	106.375	133.35	6-13	17	NT-208, VT-208
NIT-208A6	A6	170	106.375	133.35	4-13	17	NIT-208
NHT-208A6	A6	170	106.375	133.35	6-13	17	NHT-208
N-210A8	A8	220	139.719	171.45	6-17	18	N-210, N-212, NB-210, NL-10, V-210 V-212, NB-310, V-212R, BL-12, DR-10
NT-210A8	A8	220	139.719	171.45	6-17	18	NT-210, NT-212, VT-210, VT-212
NIT-210A8	A8	220	139.719	171.45	4-17	18	NIT-210, NIT-212, VIT-212, VIT-212R
N-215A11	A11	300	196.869	235	6-21	22	N-215, N-218, NB-212, V-215, V-218 V-215R,V-218R
NT-215A11	A11	300	196.869	235	6-21	22	NT-215, VT-215, NT-218
NIT-215A11	A11	300	196.869	235	4-21	22	NIT-215, VIT-218, NIT-218
V-224A15	A15	380	285.775	330.2	6-25	27	N-220, NB-215, NB-218, V-232RD V-221R, V-224R, V-232R
VIT-224A15	A15	380	285.775	330.2	8-25	27	VIT-224R, VIT-232R
N-224A20	A20	520	412.775	463.6	6-26	25	N-224, N-232, V-240, V-250
VIT-240A20	A20	520	412.775	463.6	8-26	25	NIT-224, VIT-240, VIT-250

TYPE2

單位：mm

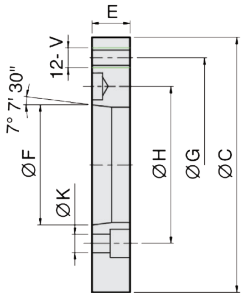

型式尺寸	主軸鼻端	C	F	H	K	G	V	E	適合夾頭
N-206A4	A4	140	63.513	82.55	11	104.78	M10	20	N-206, NT-206, NIT-206, NL-06, V-206
N-208A5	A5	170	82.563	104.78	11	133.35	M12	23	N-208, NT-208, NIT-208, NHT-208 NB-208, NL-08, V-208, VT-208
N-210A6	A6	220	106.375	133.35	13	171.45	M16	25	N-210, NT-210, NIT-210, NL-10, N-212, NT-212, NIT-212 V-210, VT-210, V-212, VT-212, VIT-212, NB-210, NB-310
N-215A8	A8	300	139.719	171.45	17	235	M20	33	N-215, NT-215, NIT-215, N-218, NB-212 V-215, VT-215, V-218, VIT-218, NIT-218
N-220A11	A11	380	196.869	235	21	330.2	M24	41	N-220, VIT-232, NB-215, NB-218, VIT-224, V-232
N-224A11	A11	520	196.869	235	21	463.6	M24	45	N-224, N-232, V-240, V-250, NIT-224
N-224A15	A15	520	285.775	330.2	25	463.6	M24	42	N-224, N-232, V-240, V-250, VIT-240, VIT-250, NIT-224, VE-250
V-224A8	A8	380	139.719	171.45	17	330.2	M24	33	V-221, V-224, N-220, NB-215
V-224A11	A11	380	196.869	235	21	330.2	M24	27	V-221, V-224
VE-263A20	A20	720	412.775	463.6	27	647.6	M30	50	VE-263, VE-279

TYPE3

單位：mm

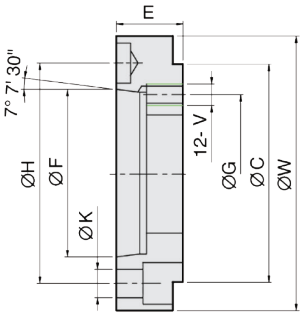

型式尺寸	主軸鼻端	C	F	H	K	G	V	W	E	適合夾頭
V-205A4	A4	80	63.513	82.55	11	100	6-M8	120	26.5	V-205
N-205A5	A5	110	82.563	104.78	11	82.55	6-M10	128	32	N-205, NT-205
N-206A6	A6	140	106.375	133.35	13	104.78	M10	165	35	N-206, NT-206, NB-306, NL-06, V-206, VT-206, NIT-206
N-208A8	A8	170	139.719	171.45	17	133.35	M12	208	40	N-208, NT-208, NIT-208, NB-208, NL-08 V-208, VT-208, NTH-208
N-212A11	A11	220	196.869	235	21	171.45	M16	278	50	N-210, NT-210, NIT-210, NL-10, N-212, NT-212, NIT-212 NB-210, V-210, VT-210, V-212, VT-212, VIT-212
N-215A15	A15	300	285.775	330.2	25	235	M20	378	57	N-215, NT-215, NIT-215, N-218, NB-212 V-215, VT-215, V-218, VIT-218, NIT-218
V-224A20	A20	380	412.775	463.6	26	330.2	M24	520	58	N-220, V-221R, V-224R, V-232R

T-NUTS

T型塊

Suitable for power chuck

· 適用於油壓夾頭。

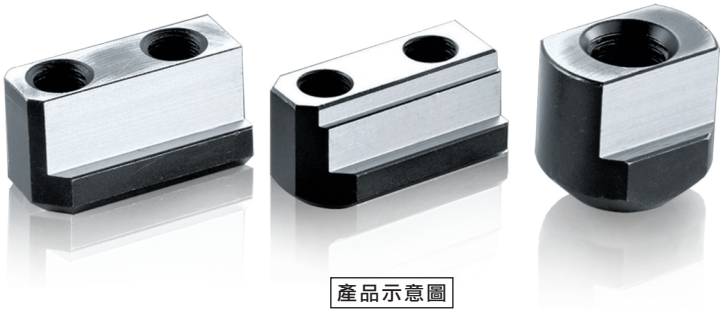

Fig. 1

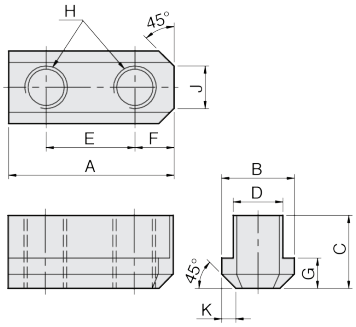

Fig. 2

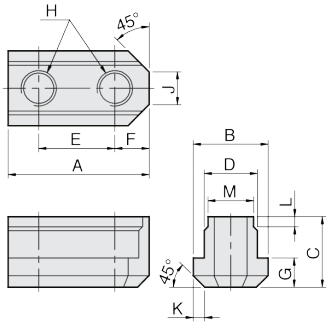

Fig. 3

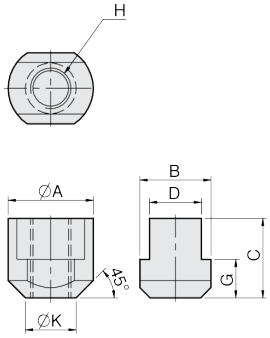

單位：mm

型式 尺寸	A	B	C	D	E	F	G	H	J	K	L	M	Fig	適合夾頭
N-205	26	14.5	15	10	14	6	5.5	M8	5	2	—	—	1	N-204, N-205
N-206	36	17.5	18.5	12	20	8.2	7.5	M10	8	2.5	—	—	1	N-206, NB-306, NL-06
N-208	46.5	20.5	20.5	14	25	10.5	8.5	M12	12	4	—	—	1	N-208, NB-208, NL-08
N-210	51	22.5	21.5	16	30	11	8.5	M12	11	3	—	—	1	N-210, NB-210, NL-10
N-212	55.5	29.5	27.8	21	30	12	11.5	M16	13	4.5	—	—	1	N-212, NB212
N-215	80	33.5	45.5	24	43	17	16.5	M20	11	5	8	22	2	N-215, N-218
V-206	36.5	17.5	22.5	12	20	7.5	7.5	M10	6	3	—	—	1	V-206, NHT-208
V-208	48	20.5	25.5	14	25	11	9.5	M12	8	4	—	—	1	V-208
V-210	55	22.5	25.5	16	30	11	9.5	M12	8	4	—	—	1	V-210
V-212	55.5	26.5	33.5	18	30	11.5	13.5	M14	11	5	—	—	1	V-212
V-215	42	35	39.2	25.5	—	—	19	M20	—	25	—	—	3	V-215, V-218
V-215 26 M20	42	35	41.2	26	—	—	19	M20	—	25	—	—	3	V-215P3.0
V-224	46	37.5	45	25	—	—	19	M20	—	26.5	—	—	3	N-220, N-224, V-221, V-224, V-232